MOEN®

Illustrated Parts

- **Order by Part Number**
- **Trim can be used with U130 series or U140 series valve**

VOSS™
M-CORE™ 3-Series Trim

Valve Trim Only	Shower Trim Only	Tub Shower Trim	Finish
UT3691	UT3692	UT3693	Chrome
UT3691BG	UT3692BG	UT3693BG	Brushed Gold
UT3691BN	UT3692BN	UT3693BN	Brushed Nickel
UT3691NL	UT3692NL	UT3693NL	Polished Nickel
UT3691ORB	UT3692ORB	UT3693ORB	Oil Rubbed Bronze
UT3691BL	UT3692BL	UT3693BL	Matte Black
	UT3692EP	UT3693EP	Chrome
	UT3692EPBG	UT3693EPBG	Brushed Gold
	UT3692EPBN	UT3693EPBN	Brushed Nickel
	UT3692EPNL	UT3693EPNL	Polished Nickel
	UT3692EPORB	UT3693EPORB	Oil Rubbed Bronze
	UT3692EPBL	UT3693EPBL	Matte Black

EP =1.75gpm head

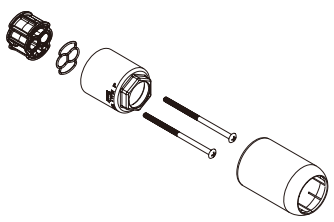

Optional 1" Handle Extension Kit

Model	Finish
200781	Chrome
200781BG	Brushed Gold
200781BN	Brushed Nickel
200781NL	Polished Nickel
200781ORB	Oil Rubbed Bronze
200781BL	Matte Black

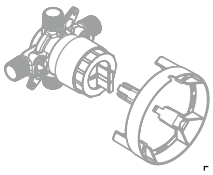

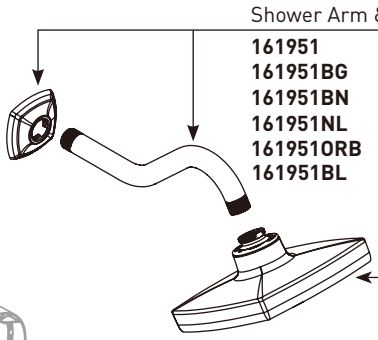

Shower Arm & Flange Kit

161951	Chrome
161951BG	Brushed Gold
161951BN	Brushed Nickel
161951NL	Polished Nickel
161951ORB	Oil Rubbed Bronze
161951BL	Matte Black

Shower Head 2.5 GPM

S6365	Chrome
S6365BG	Brushed Gold
S6365BN	Brushed Nickel
S6365NL	Polished Nickel
S6365ORB	Oil Rubbed Bronze
S6365BL	Matte Black

Shower Head 1.75 GPM

S6365EP	Chrome
S6365EPBG	Brushed Gold
S6365EPBN	Brushed Nickel
S6365EPNL	Polished Nickel
S6365EPORB	Oil Rubbed Bronze
S6365EPBL	Matte Black

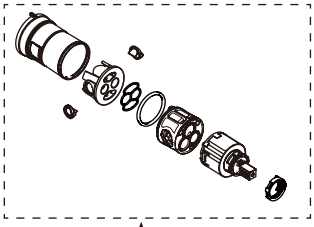

Cartridge Assembly
1213

Sleeve

200778	Chrome
200778BG	Brushed Gold
200778BN	Brushed Nickel
200778NL	Polished Nickel
200778ORB	Oil Rubbed Bronze
200778BL	Matte Black

Escutcheon Kit

200787	Chrome
200787BG	Brushed Gold
200787BN	Brushed Nickel
200787NL	Polished Nickel
200787ORB	Oil Rubbed Bronze
200787BL	Matte Black

Snap Ring
200774

Cartridge Nut
207669

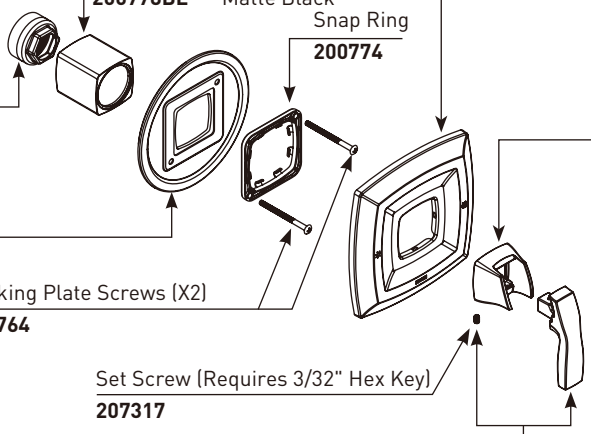

Handle Hub Kit

200820	Chrome
200820BG	Brushed Gold
200820BN	Brushed Nickel
200820NL	Polished Nickel
200820ORB	Oil Rubbed Bronze
200820BL	Matte Black

Backing Plate
200768

Backing Plate Screws (X2)
200764

Set Screw (Requires 3/32" Hex Key)
207317

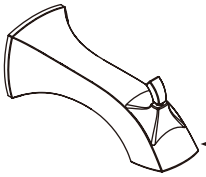

Tub Spout

161955	Chrome
161955BG	Brushed Gold
161955BN	Brushed Nickel
161955NL	Polished Nickel
161955ORB	Oil Rubbed Bronze
161955BL	Matte Black

Handle Kit

200786	Chrome
200786BG	Brushed Gold
200786BN	Brushed Nickel
200786NL	Polished Nickel
200786ORB	Oil Rubbed Bronze
200786BL	Matte Black

M•PACT™ System

TO ORDER PARTS CALL: 1-800-BUY-MOEN
www.moen.com